COMBINATION METER

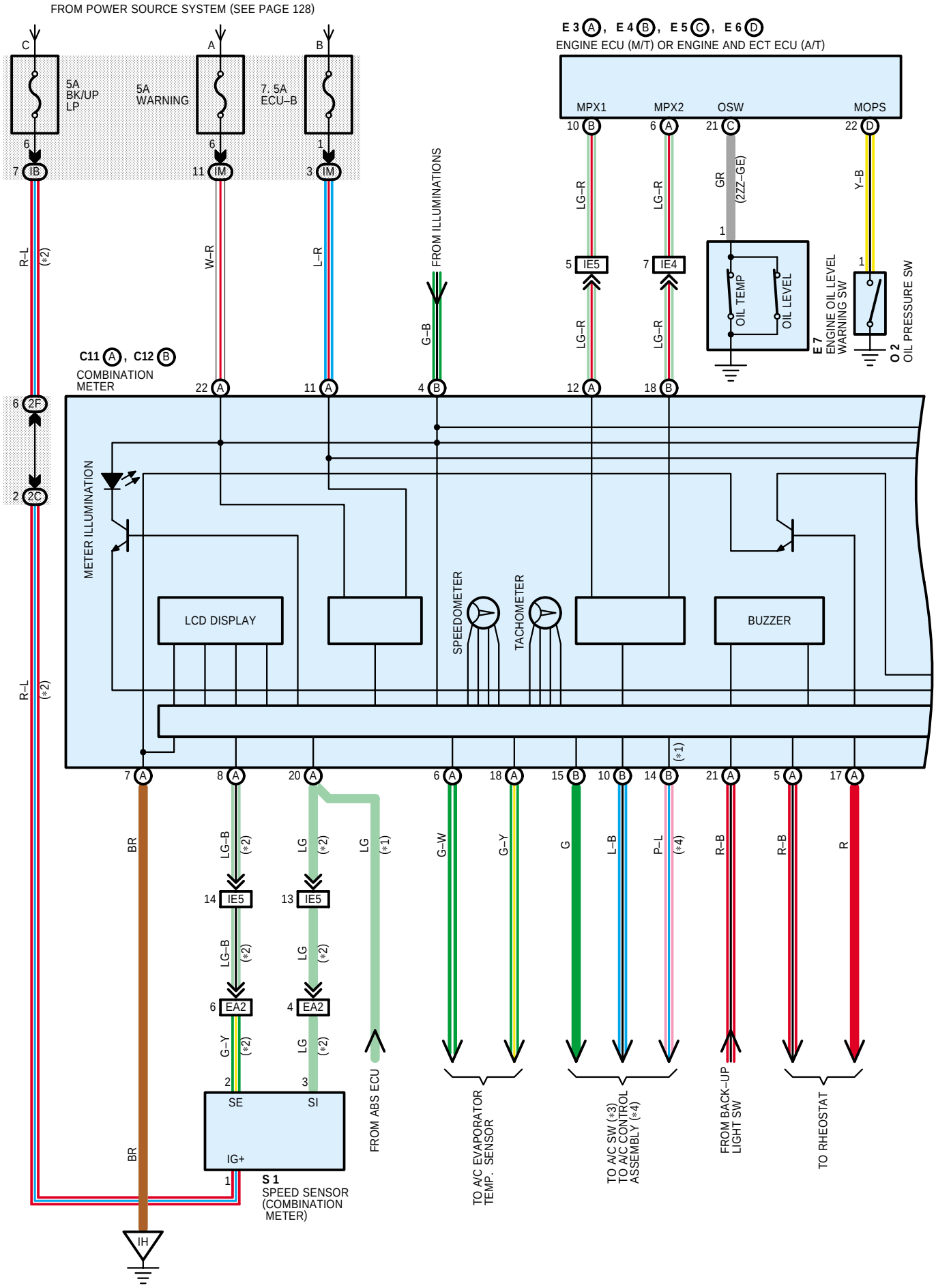

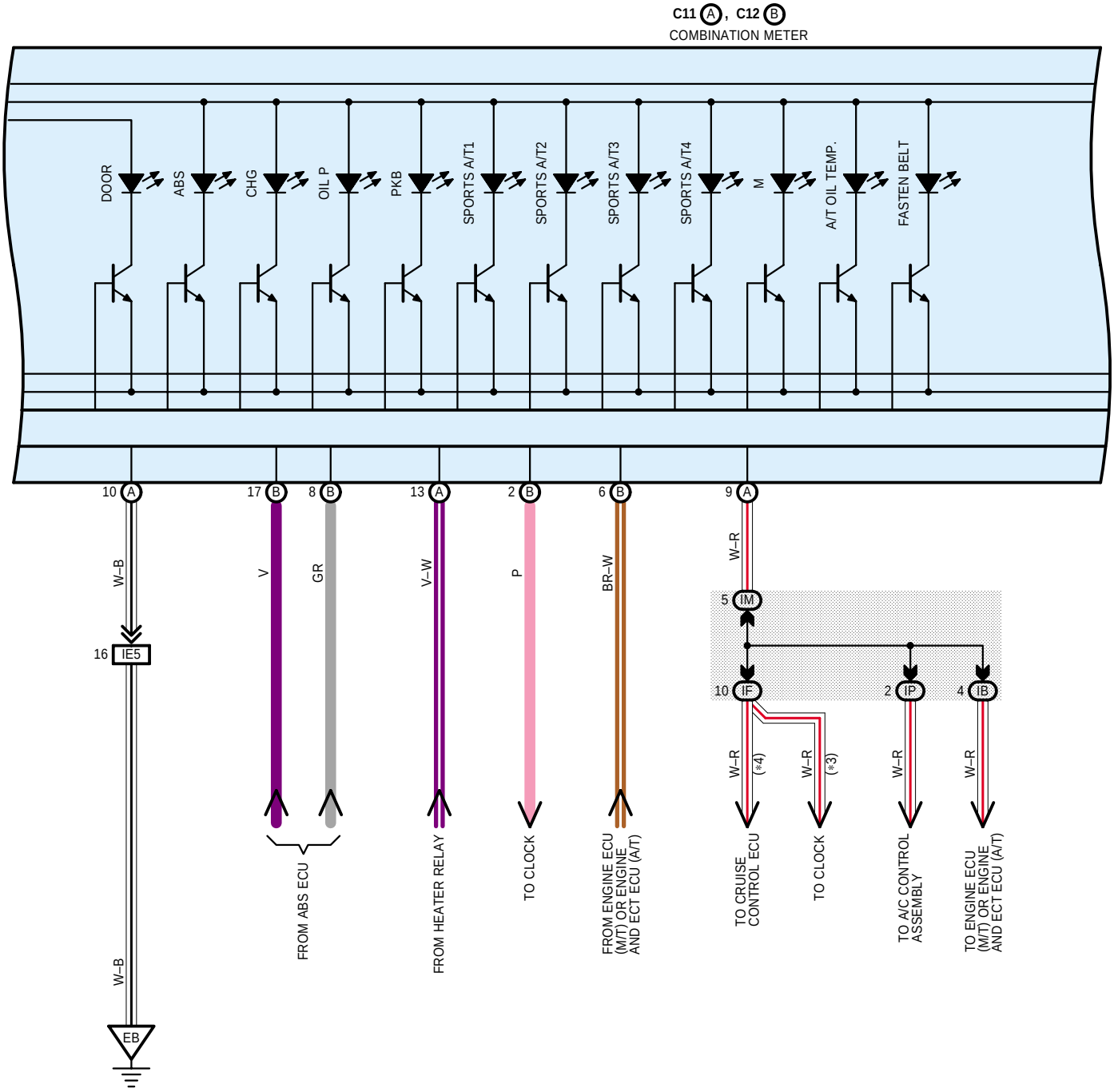
C11 A , C12 B
COMBINATION METER
DOOR
ABS
CHG
OIL P
PKB
SPORTS A/T1
SPORTS A/T2
SPORTS A/T3
SPORTS A/T4
M
A/T OIL TEMP.
FASTEN BELT
10 A
17 B
8 B
13 A
2 B
6 B
9 A
W–B
V
GR
V–W
P
BR–W
W–R
5 IM
16 IE5
10 IF
2 IP
4 IB
W–R
(*4)
W–R
(*3)
W–R
W–R
W–B
EB
FROM ABS ECU
FROM HEATER RELAY
TO CLOCK
FROM ENGINE ECU (M/T) OR ENGINE AND ECT ECU (A/T)
TO CRUISE CONTROL ECU
TO CLOCK
TO A/C CONTROL ASSEMBLY
TO ENGINE ECU (M/T) OR ENGINE AND ECT ECU (A/T)

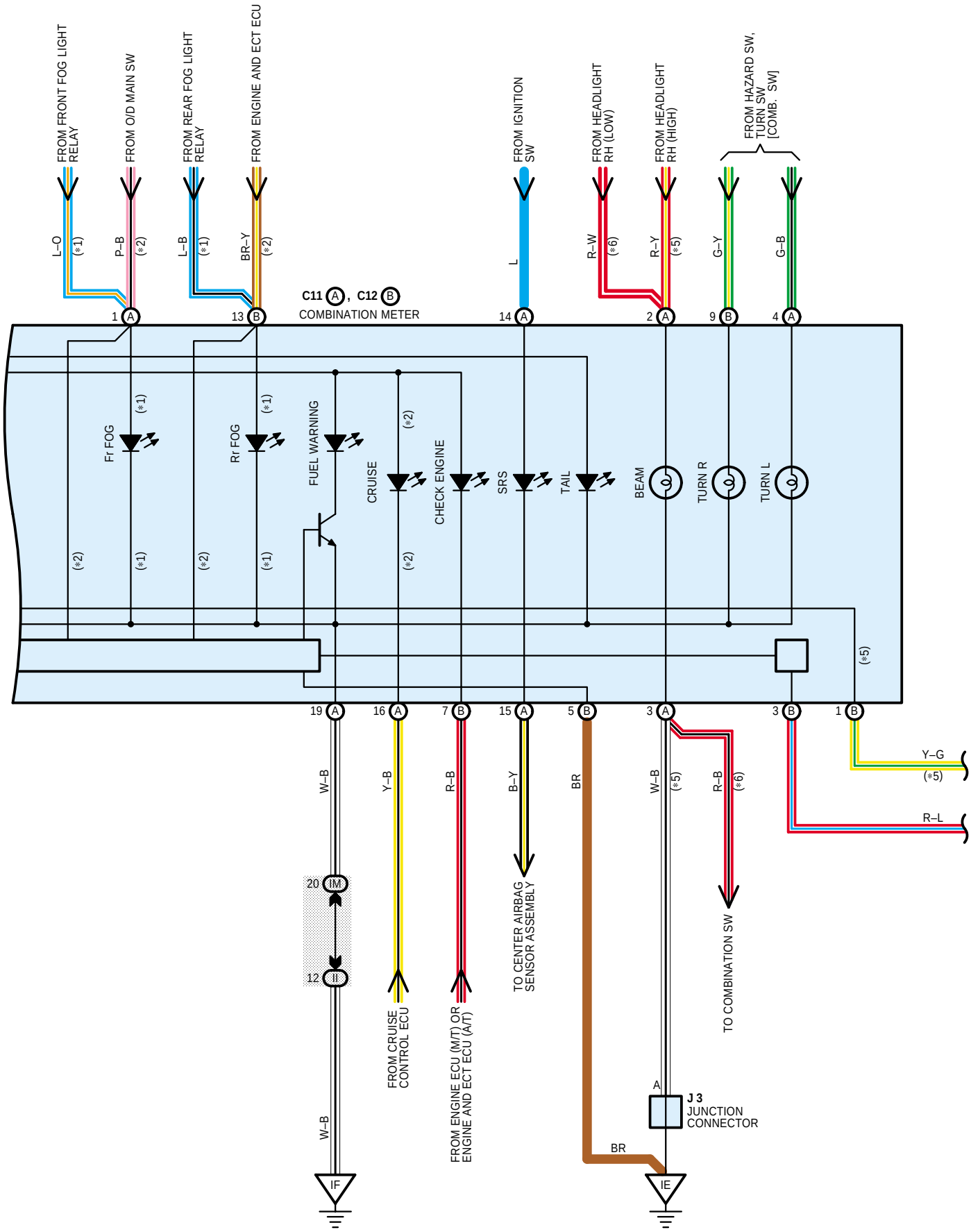
FROM FRONT FOG LIGHT RELAY
FROM O/D MAIN SW
FROM REAR FOG LIGHT RELAY
FROM ENGINE AND ECT ECU
FROM IGNITION SW
FROM HEADLIGHT RH (LOW)
FROM HEADLIGHT RH (HIGH)
FROM HAZARD SW, TURN SW [COMB. SW]
L–O
P–B
L–B
BR–Y
L
R–W
R–Y
G–Y
G–B
(*1)
(*2)
(*5)
(*6)
C11 A, C12 B
COMBINATION METER
1 A
13 B
14 A
2 A
9 B
4 A
Fr FOG
Rr FOG
FUEL WARNING
CRUISE
CHECK ENGINE
SRS
TAIL
BEAM
TURN R
TURN L
19 A
16 A
7 B
15 A
5 B
3 A
3 B
1 B
W–B
Y–B
R–B
B–Y
BR
Y–G
R–L
20 IM
12 II
FROM CRUISE CONTROL ECU
FROM ENGINE ECU (M/T) OR ENGINE AND ECT ECU (A/T)
TO CENTER AIRBAG SENSOR ASSEMBLY
TO COMBINATION SW
A
J 3
JUNCTION CONNECTOR
IF
IE

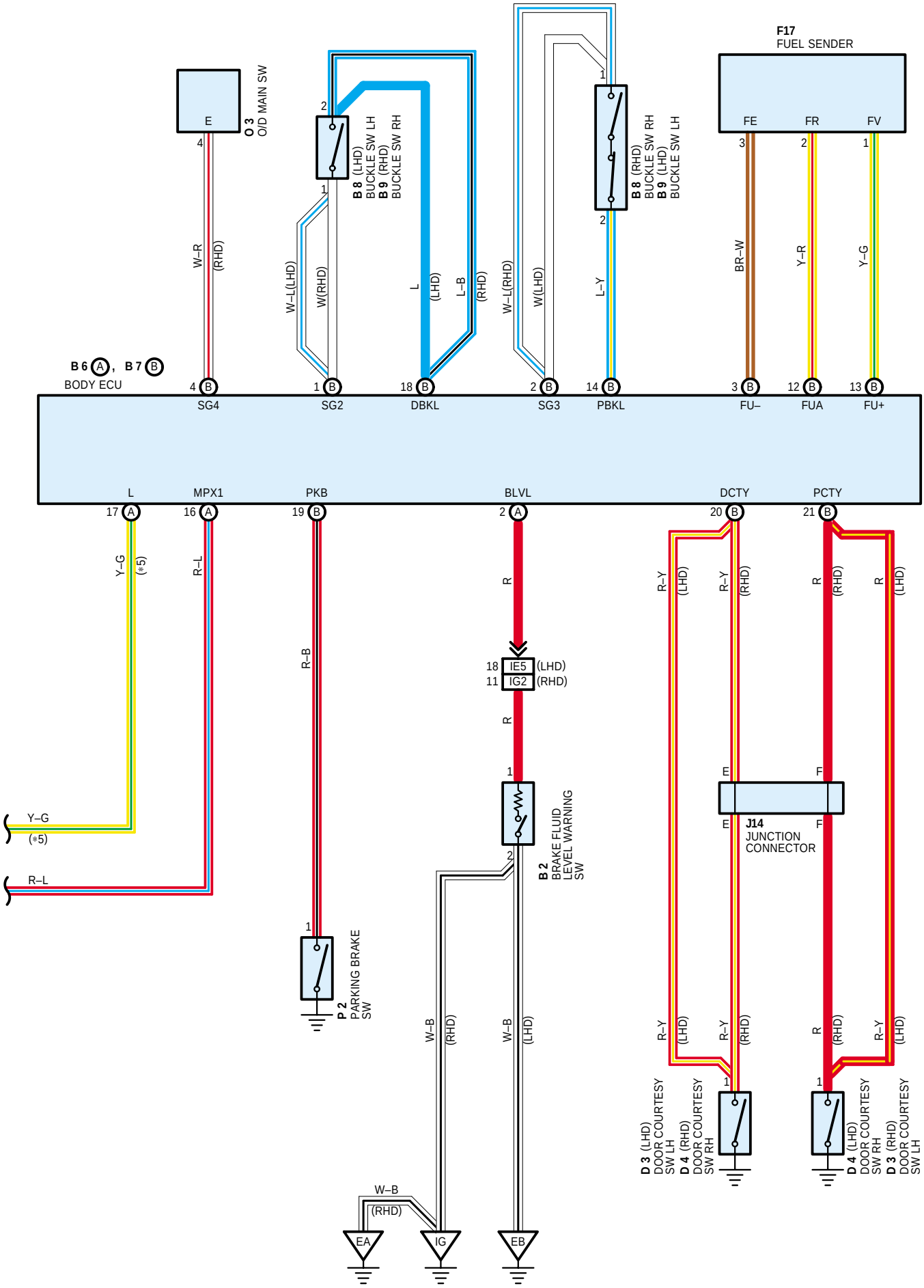
O 3
O/D MAIN SW
E
4
W–R
(RHD)
B 8 (LHD)
BUCKLE SW LH
B 9 (RHD)
BUCKLE SW RH
W–L(LHD)
W(RHD)
L
(LHD)
L–B
(RHD)
W–L(RHD)
W(LHD)
L–Y
B 8 (RHD)
BUCKLE SW RH
B 9 (LHD)
BUCKLE SW LH
F17
FUEL SENDER
FE
FR
FV
BR–W
Y–R
Y–G
B 6 (A), B 7 (B)
BODY ECU
SG4
SG2
DBKL
SG3
PBKL
FU–
FUA
FU+
L
MPX1
PKB
BLVL
DCTY
PCTY
Y–G
(*5)
R–L
R–B
R
IE5 (LHD)
IG2 (RHD)
B 2
BRAKE FLUID
LEVEL WARNING
SW
P 2
PARKING BRAKE
SW
J14
JUNCTION
CONNECTOR
W–B
(RHD)
W–B
(LHD)
R–Y
D 3 (LHD)
DOOR COURTESY
SW LH
D 4 (RHD)
DOOR COURTESY
SW RH
D 4 (LHD)
DOOR COURTESY
SW RH
D 3 (RHD)
DOOR COURTESY
SW LH
EA
IG
EB